1 Kit 187152

MERCEDES GLE (C292), 4-dr Coupé, 15-19

ISO 11154-E

This kit is only for vehicles with fixpoint mounting.

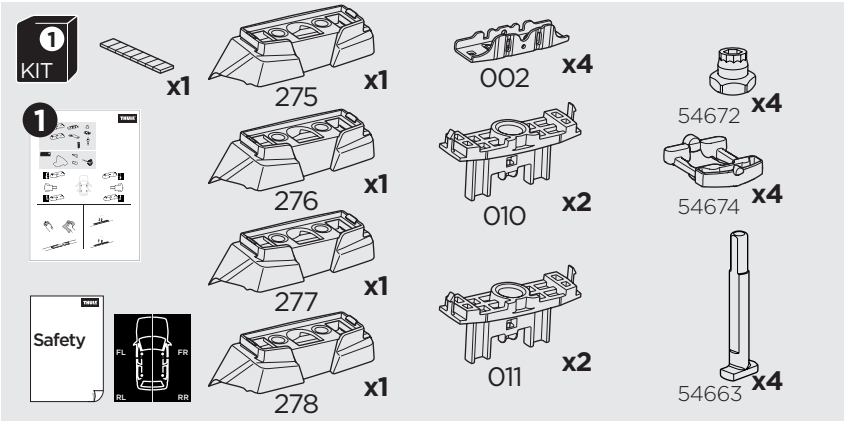

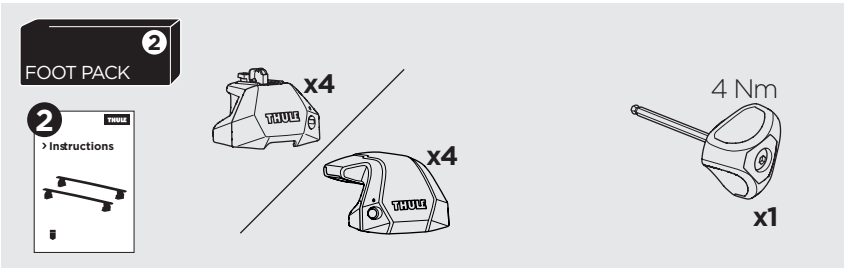

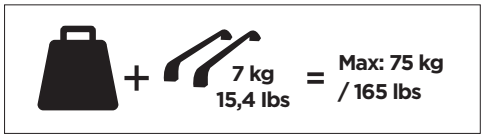

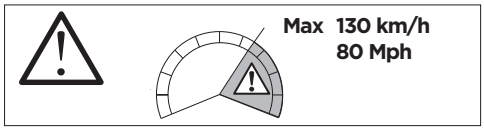

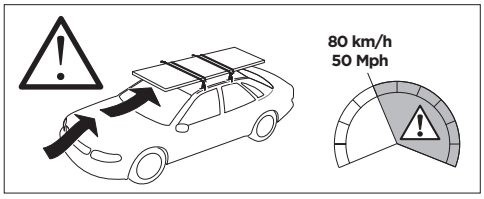

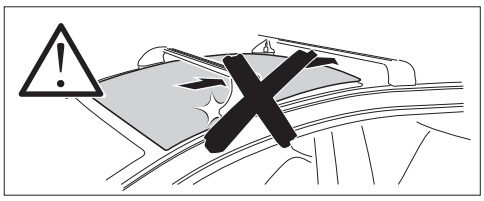

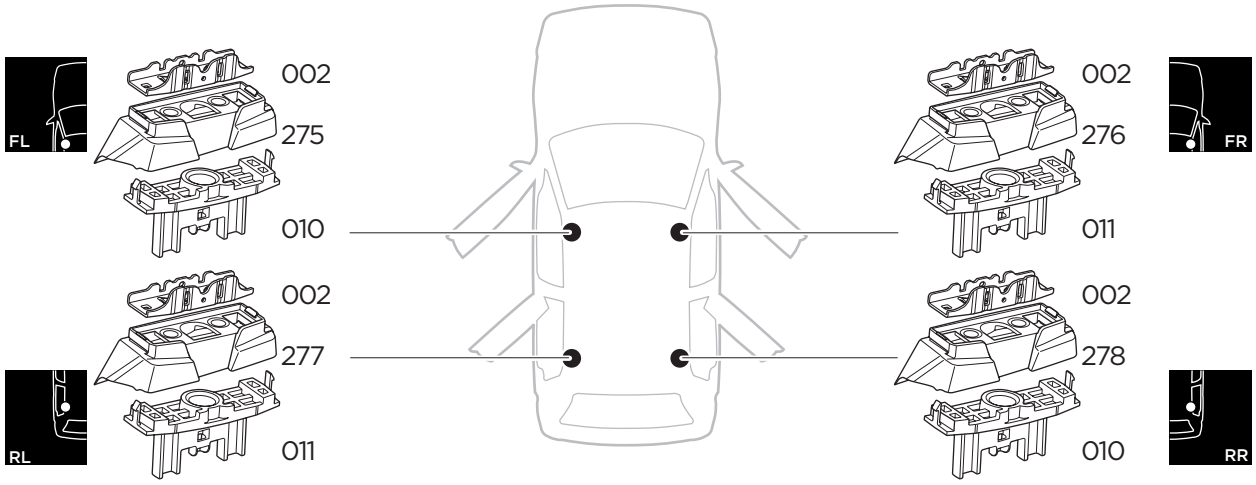

1

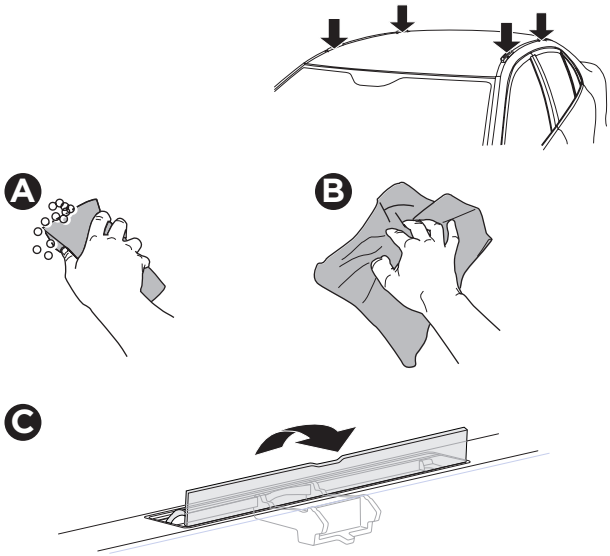

2

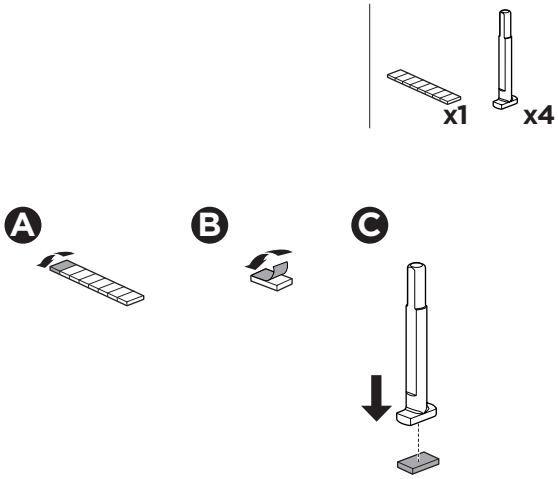

5562599001

Bring your life
thule.com

3

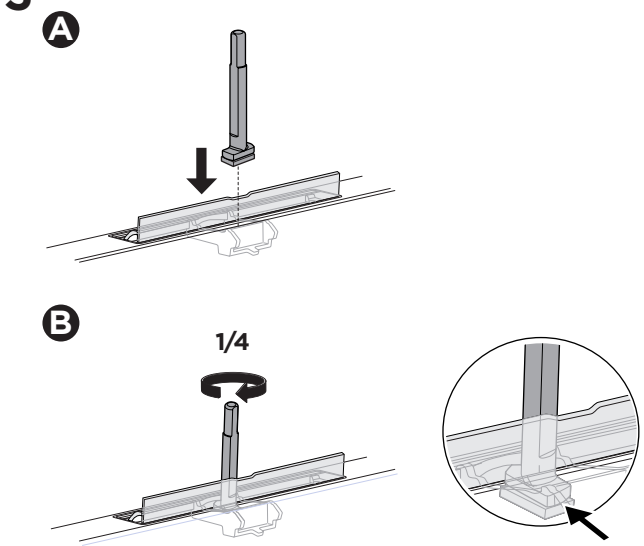

4

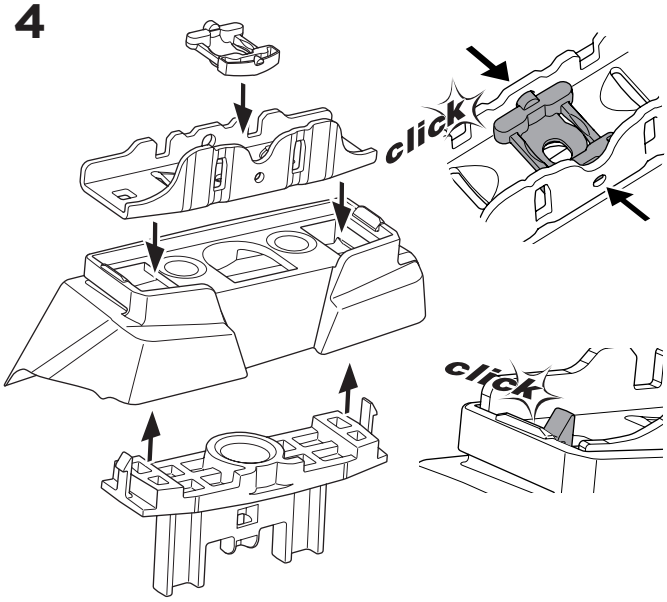

5

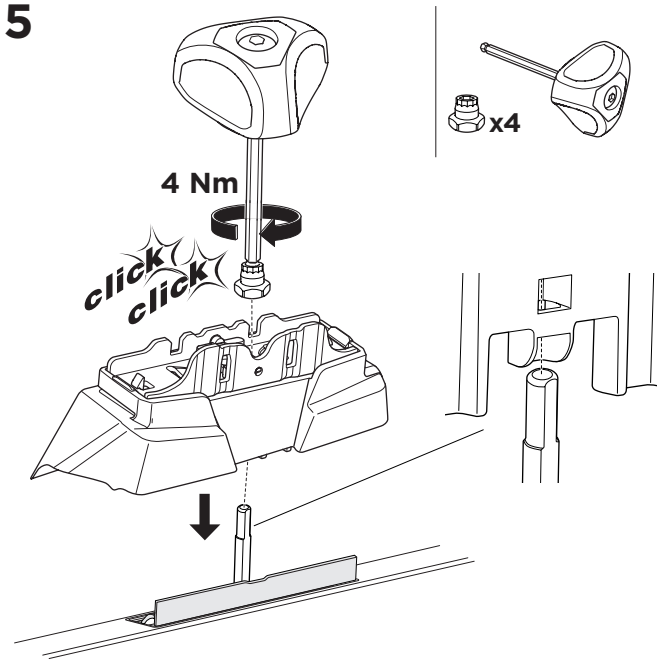

6

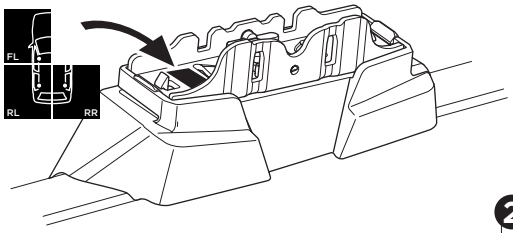

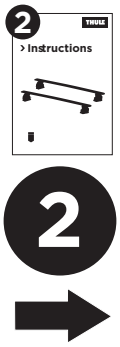

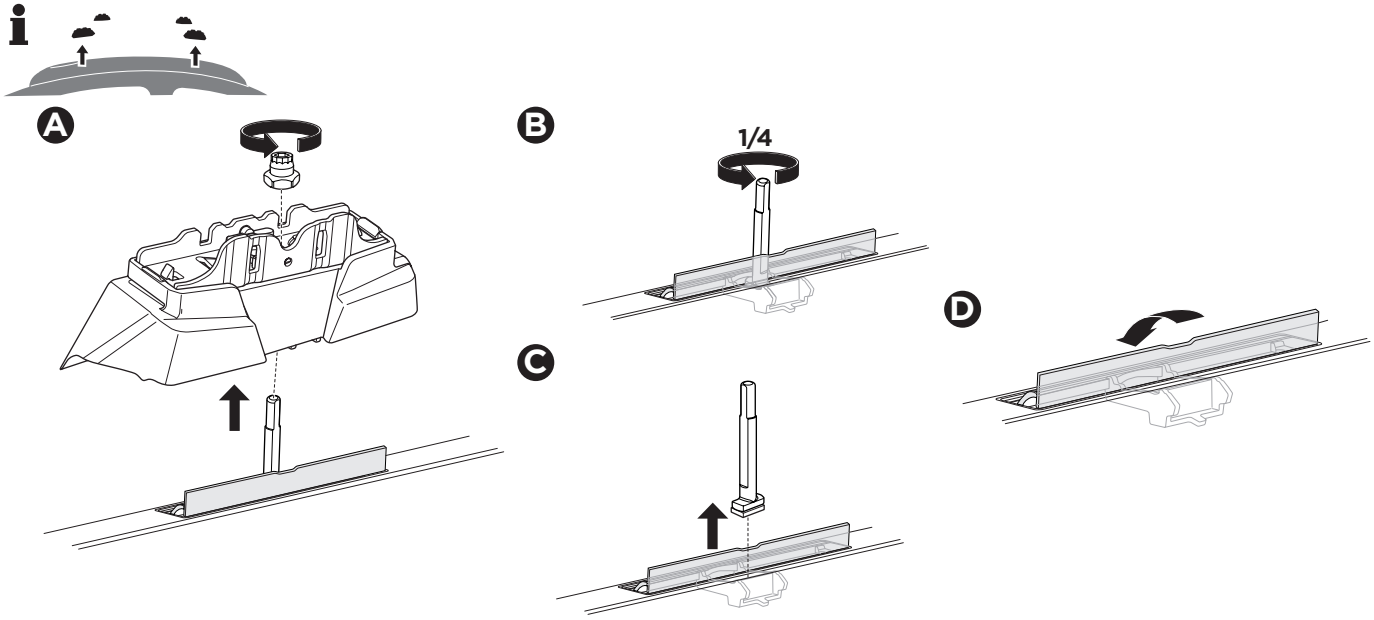

Thule Sweden AB, Borggatan 5
335 73 Hillerstorp, SWEDEN
info@thule.com
www.thule.com

PART OF THULE GROUP
© Thule Group 2022. All rights reserved.

5562599001